Cordless Cellular Shades

Installation Instructions

BLINDSTER

Email: **customerservice@blindster.com**
Call us: **(888) 256-8672**
Mon - Fri 8am - 7pm (CT)

Congratulations on purchasing Cordless Cellular Shades from Blindster. This window treatment is perfect for any room in your home where you need the utmost in privacy and glare reduction. To properly install your new shade, please follow these instructions.

Step 1: Check Your Package Contents

Before you get started, check your packaging to verify you received the right items in your mounting hardware kit. You should have the following items:

Part	Quantity
Mounting bracket	2 (for shades up to 36” wide) 3 (for shades 37” to 52” wide) 4 (for shades 53” to 72” wide)
1 1/8” screws	2 per bracket
Hold down brackets	2 (OUTSIDE MOUNT ONLY)
3/8” screws for hold downs	4
Handle for bottom rail	1 (shades up to 59” wide) 2 (shades over 59” wide)

Note: Mounting hardware kit includes one extra screw of each size noted in table above

Step 2: Tools for the Job

After verifying you have all the items required in the mounting hardware kit, locate and make handy the following tools:

- **Screwdriver**
- **Tape measure**
- **Pencil**
- **Drill**
- **Level**
- **Step stool**

Note: If mounting shade into dry wall or plaster, use #6 plastic anchors (not included in mounting hardware kit). When drilling, use a 3/32” drill bit for screws and a ¼” drill bit for wall anchors.

Step 3: Installing the Brackets and Head Rail

After you've gathered all items in the mounting hardware kit and the tools you need, it's time to being the installation process.

Remember that one mounting bracket should be placed about 1" to 6" from either end of the head rail. If your shade is wide enough to require 3 or more brackets, space them as evenly as possible between the two outer brackets. It's also important to place them in a manner that doesn't interfere with the function of the cords and mechanisms inside the head rail. Use the picture below as a reference to assure proper bracket placement.

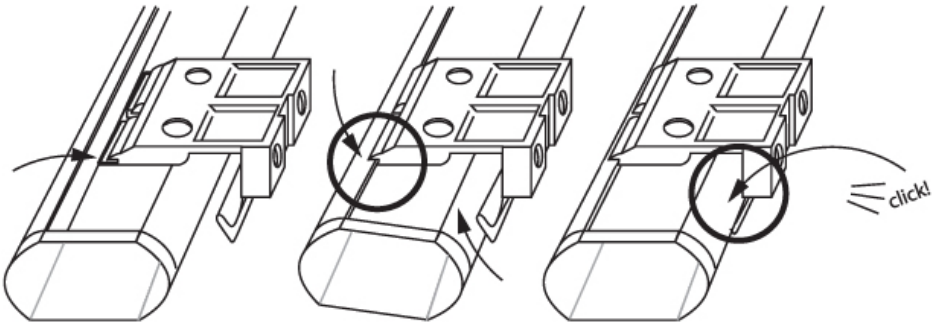

When attaching the brackets to the head rail, make sure the locking arm is facing out. Then, position each bracket so that the head rail engages the inside front and back of the bracket—then, push the lock arm inward to lock the head rail into place.

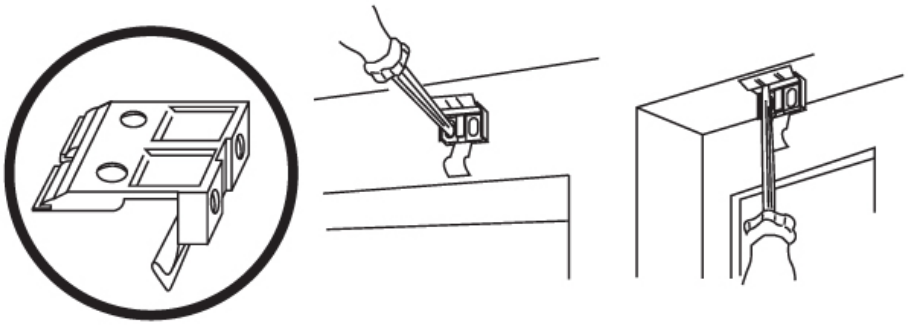

- **Instructions for Outside Mounting**
  If you're installing your shade outside of your window, attach the brackets to the head rail as described above. Then, hold the shade as level as possible at the desired height and center it over your window.

  Mark the exact location of each bracket with a pencil on the wall. Then, remove the brackets from the head rail and position each one at the marked locations and secure them to the wall using 1 1/8" screws. For easier installation, pre-drill the screw holes using a 5/64" drill bit.

- **Instructions for Inside Mounting**

If you're installing your shade inside your window, clip the brackets onto the head rail as described above. Then, while holding the shade in place inside the window frame, use a pencil to mark the locations where the brackets contact the window frame.

Next, remove the brackets from the head rail and align them with the marks you just made. Attach one bracket to these areas by pre-drilling screw holes with a 5/64" drill bit and then using the included 1 1/8" screws.

Step 4: Securing the Head Rail

To secure the head rail, place it on the brackets that are now secured into the window frame or wall and lock it into place as described in Step 3. Be sure to gently pull on the head rail to make sure it is locked securely into place.

Step 5: Attaching the Handle

To attach the handle to the bottom rail of the shade, see the picture below.

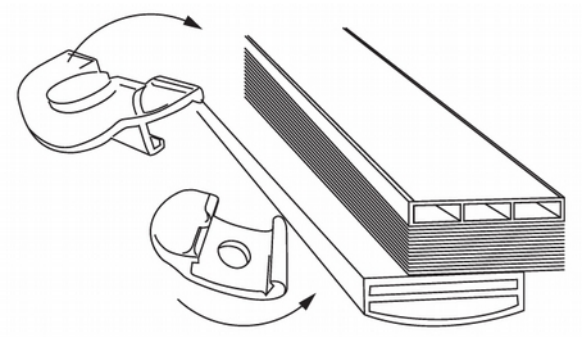

The included handle is designed to minimize contact with the shade fabric to keep it in excellent condition.

When raising or lowering the shade using the handle, do so slowly and carefully to make sure the pleated fabric stacks neatly to avoid damaging the shade.
If your shade is wide enough to require 2 handles, divide the total width of the shade by 4—then, attach one handle that distance from each outside edge of the shade to make sure they are installed evenly. In addition, always grasp both handles lifting and lowering the shade.

Raising and the Lowering the Shade

Follow these instructions for proper operation of your shade from Blindster:

- **Lowering the Shade**
  To lower your shade, grip the bottom rail/installed handle and gently pull straight down until it reaches the desired height.

- **Raising the Shade**
  To raise your shade, place your hand under the bottom rail/installed handle and slowly lift up until it reaches the desired height.

Tips for Cleaning Your Shade

To keep your Blindster shade looking as pristine as the day you bought it, wipe the head rail and bottom rail with a damp sponge on a regular basis to remove dirt and dust.

To clean the shade fabric, use a feather duster or vacuum with a soft brush attachment to avoid damaging the shade.